GEN5X1

MSRP: ~~$99.95~~ You save 20%

$79.95

ADD TO CART

1-BANK, 5-AMP ON-BOARD BATTERY CHARGER

Battery Maintainer + Battery Desulfator

Meet the all-new GEN5X1. Similar to our GENM1, only better. It's 51% smaller and delivers 43% more power. It's one of the best performing onboard marine battery chargers we have ever made. A one-bank onboard battery charger rated at 5-amps for 12-volt batteries, including marine, boat, starter, and deep-cycle batteries. Independently charge and control each battery bank with selectable charging modes - including 12V, 12V AGM, 12V Lithium, and 12V Repair Mode - for all types of lead-acid and lithium-ion batteries.

THE ALL NEW GENIUS.

ON-BOARD SMART BATTERY CHARGERS.

THE NEXT GENERATION.

Our most powerful, efficient, and compact charger yet. A one-bank onboard battery charger rated at 5-amps for 12-volt batteries, including marine, boat, starter, and deep-cycle batteries. Independently charge and control each battery bank with selectable charging modes - including 12V, 12V AGM, 12V Lithium, and 12V Repair Mode - for all types of lead-acid and lithium-ion batteries.

ON-BOARD 5A CHARGER

1 BANK

5A PER BANK

FOR 12V BATTERIES

100% WATERPROOF.

RATED TO IP68.

The GEN series is fully-sealed, 100% waterproof and designed to withstand hours underwater. The GEN5X1 is an on-board charger built for extreme conditions with an ingress protection rating of IP68. It has survived brutal life cycle testing, including thousands of hours underwater.

FULLY-SEALED CHARGING.

51%
SMALLER

OVER
43%
MORE POWER

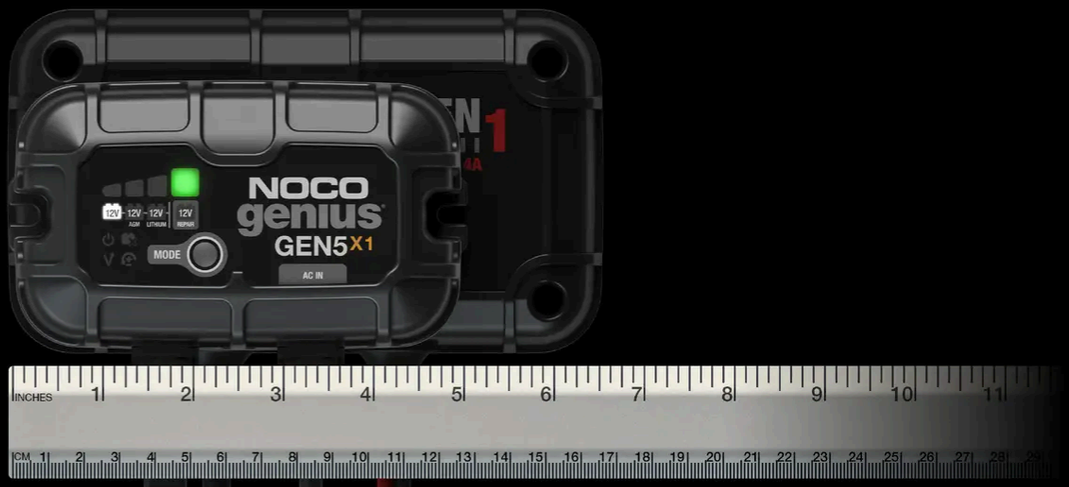

MORE POWER. SMALLER SIZE.

BETTER PERFORMANCE.

Meet the all-new GEN5X1. Similar to our GENM1, only better. It's 51% smaller and delivers 43% more power. The GEN5X1 uses high-frequency switch-mode technology to efficiently convert A/C power into safe D/C power for battery charging. And its onboard microcomputer precisely controls the charging to minimize power loss to create an incredibly compact form factor.

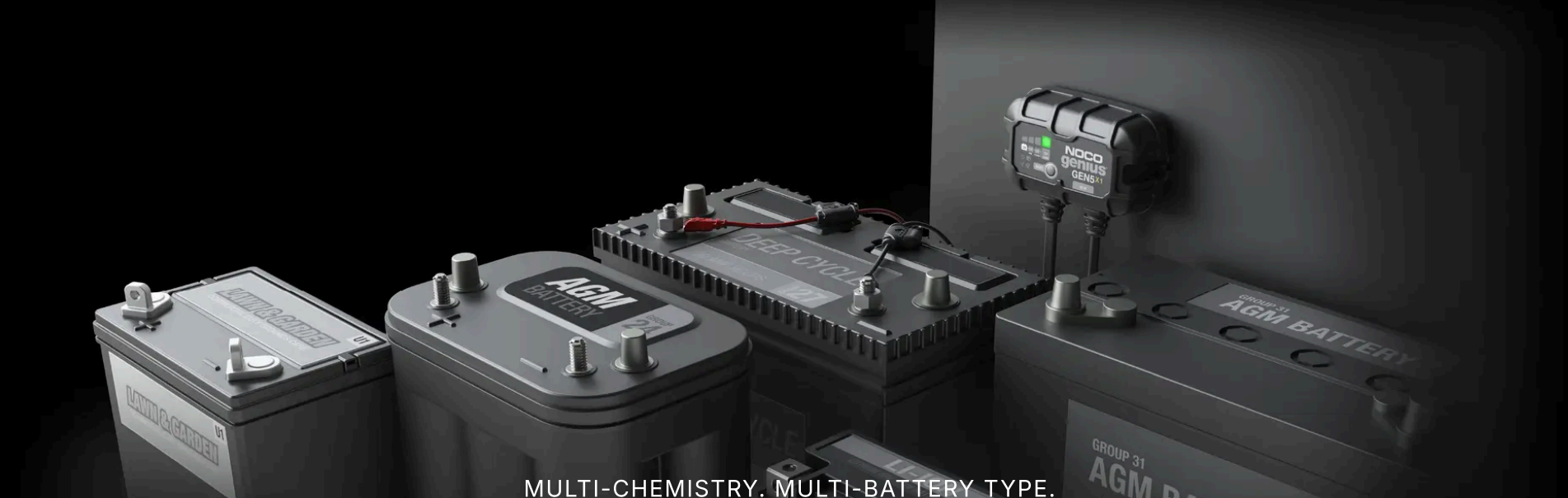

MULTI-CHEMISTRY. MULTI-BATTERY TYPE.

DO MORE WITH ONE CHARGER.

A multi-functional design that allows you to charge in more ways. Effortlessly charge 12-volt lead-acid and lithium-ion batteries of multiple chemistries (Flooded, gel, maintenance-free and AGM batteries) and types (Starter, deep-cycle, marine, and more). A simplified mounting system allows for quick and easy installations in any direction - even up-side-down - with an integrated anti-vibration backing to isolate shock, vibration, and noise.

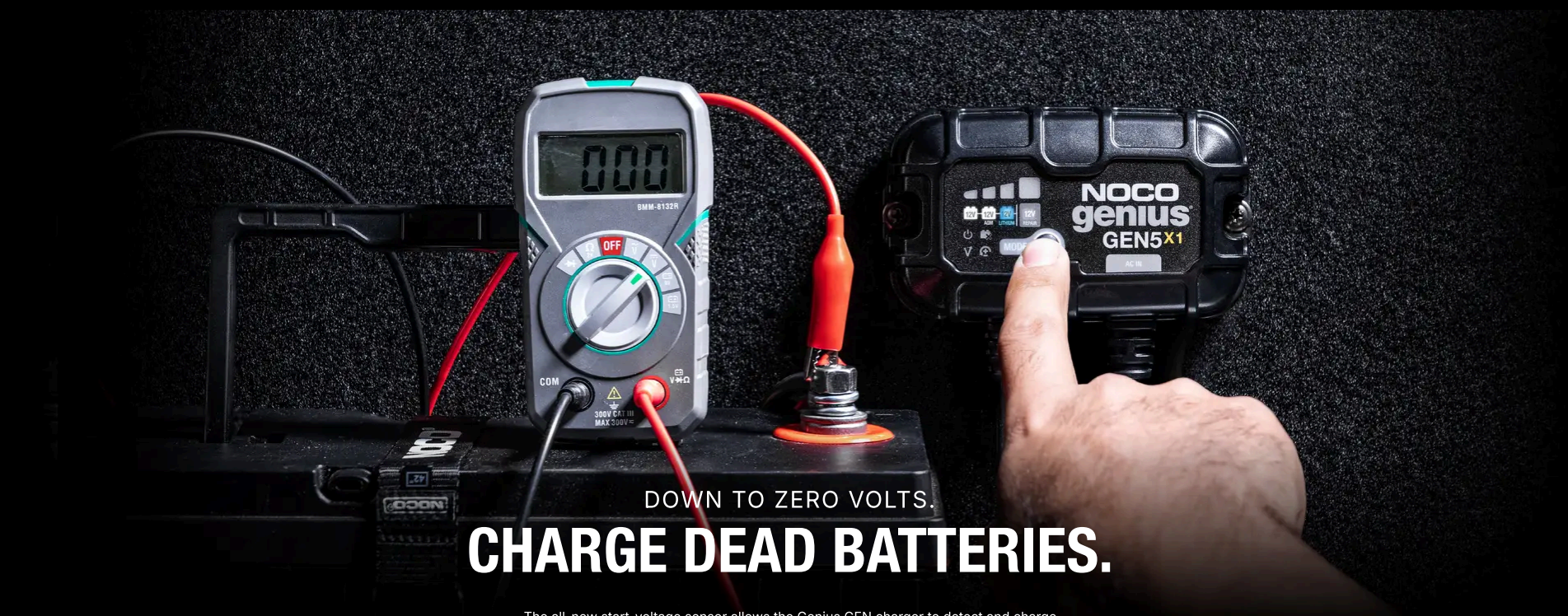

DOWN TO ZERO VOLTS.

CHARGE DEAD BATTERIES.

The all-new start-voltage sensor allows the Genius GEN charger to detect and charge dead batteries as low as 1-volt. For extremely dead batteries lower than 1-volt, manually turn on force mode to detect and charge batteries all the way down to zero volts.

THERMAL COMPENSATION.

MORE PRECISE CHARGING IN ANY CLIMATE.

The new integrated thermal sensor automatically monitors and adjusts the charging cycle based on fluctuations of ambient temperature, limiting the chance of under-charging or over-charging, providing a more accurate and fully charged battery. Avoids under-charging in cold weather down to -4F and avoids over-charging in hot weather up to 104F.

BRING BATTERIES BACK TO LIFE.

AUTO DETECTION. AUTO REPAIR. IMPROVED PERFORMANCE.

The GEN5X1 automatically detects sulfation/acid stratification. If any is found, the GEN5X1 will automatically repair and reverse the damage done to the battery, extending the usable life and increasing the performance.

YEAR-ROUND CHARGING. ZERO OVERCHARGE. AUTO MEMORY.

COMPLETELY AUTOMATIC.

Finally a charger from start to finish that's completely automatic. No special modes, no technical knowledge required. Genius will safely charge any battery. Detect damaged batteries and intuitively repair them. And actively monitor for long-term battery maintenance and extend battery life. This system allows for continuous operation without user intervention, and zero risk of overcharging your battery.

WHAT'S IN THE BOX

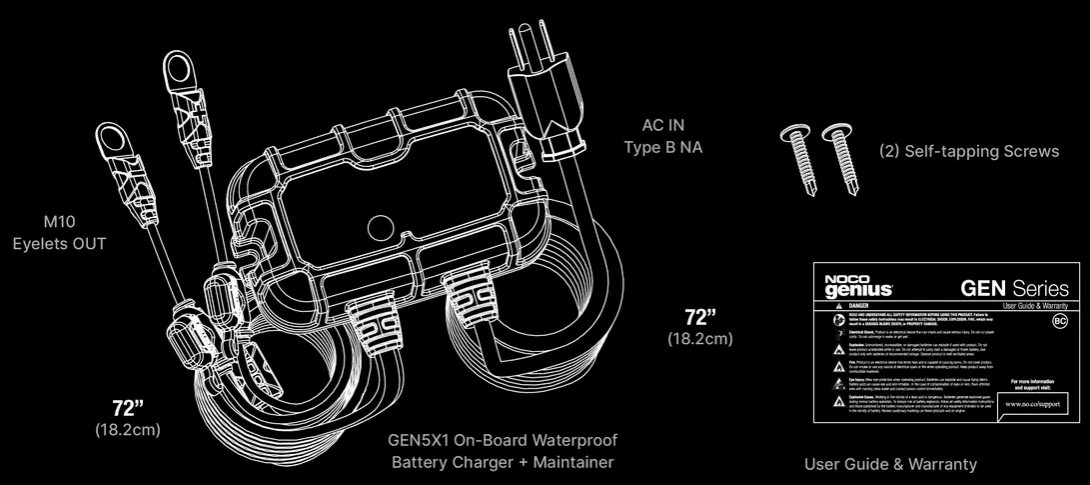

You may also like:

GCP1

AC Port Plug

USD $22.95

ADD TO CART

GCP1E

6-Foot AC Port Plug

USD $34.95

ADD TO CART

GCP1EX

12-Foot AC Port Plug

USD $39.95

ADD TO CART

GCP2

2-Way AC Port Plug

USD $29.95

ADD TO CART

GENPRO10X1

1-Bank 10A Onboard Battery Charger

USD $124.95

ADD TO CART

NOCO

SIGN UP FOR EXCLUSIVE UPDATES.

Enter Email

CHAT

FIND NOCO® PRODUCTS.

US / EN

SHOP & LEARN

Air
Boost
Boost X
Boost Air
Boost MAX
Genius
GeniusPRO
Genius GEN
Genius GENPRO
Genius GX
Lithium Powersport
Lithium Dual-Purpose
Accessories

SUPPORT

Help Desk
Contact Us
Register Products
User Guides & More

ACCOUNT

Shopping Cart
Order Status
My Account
Return Policy

ABOUT

NOCO
Where To Buy

FOR BUSINESS

Become A Reseller
Downloads

Privacy Policy • Cookie Policy • Terms Of Use • Cookie Preferences • Do Not Sell or Share My Personal Information

Copyright © 2025 NOCO. All Rights Reserved.